1" Lightlines®

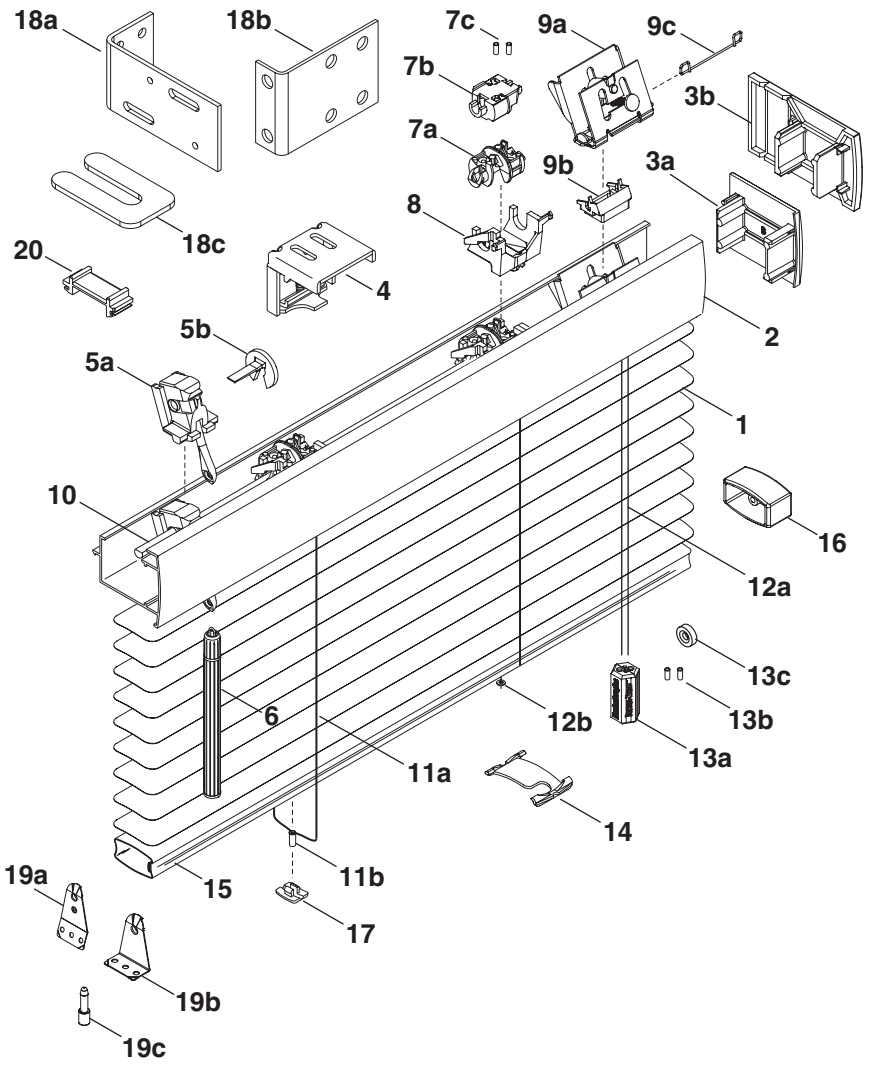

Standard Parts

1. Slat
2. Headrail
3a. Headrail End Cap
3b. Extended Headrail End Cap
4. Universal Gripper Bracket
5a. Wand Tilter
5b. Tilter Lock
6. Wand
7a. Tape Roll/Slot Type
7b. Tape Roll/Bead Type
7c. X-Tape Locator – Grommet
8. Tape Roll Support
9a. Cordlock
9b. Cordlock Adaptor
9c. Lift Cord Separator
10. Tiltrod
11a. Cable Tape Ladder
11b. Cable Tape Grommet
12a. Lift Cord
12b. Lift Cord Grommet
13a. Break-Thru® Safety Tassel
13b. Break-Thru Safety Tassel Grommet
13c. Safety Cord Stop
14. Tape Spacer
15. Bottom Rail
16. Bottom Rail End Cap
17. Tape Button

Optional Parts

18a. Extension Bracket
18b. End Mount Bracket
18c. Bracket Shim
19a. Hold-Down Bracket (Jamb)
19b. Hold-Down Bracket (Sill)
19c. Hold-Down Pin
20. Cord Bridge

©2004 Hunter Douglas Inc. ®Registered trademark of Hunter Douglas Inc. ™ Trademark of Hunter Douglas Inc. Last Revision 3/31/04

1" Decor®

No.	PCN	Description
1.	5001400xxxH	.008" x 25mm Slat
2.	5908099xxx	Convex Headrail (with bottom rail nested) – 96 ft.
	5908009xxx	Convex Headrail (with bottom rail nested) – 192 ft.
3a.	5908034xxx	Convex Headrail End Cap
3b.	5907033xxx	Extended Convex Headrail End Cap
4.	5908136000	Universal Gripper Bracket
5.	5908566000	Wand Tilter Assembly
6.	5008508000	12" Wand Assembly
	5008501000	20" Wand Assembly
	5008502000	30" Wand Assembly
	5008503000	40" Wand Assembly
	5008504000	50" Wand Assembly
	5008505000	60" Wand Assembly
	5008570000	70" Wand Assembly
	5008578000	78" Wand Assembly
	5008506000	90" Wand Assembly
	5008507000	120" Wand Assembly
7a.	5908570000	Tape Roll/Slot Type
7b.	5908569000	Tape Roll/Bead Type
7c.	5008047000	X-Tape Locator – Grommet
8.	5907567000	Tape Roll Support
9a.	5008564000	Cordlock
9b.	5908565000	Cordlock Adaptor
9c.	5008065000	Lift Cord Separator
10.	5908027000	Tiltrod – 16 ft.
11a.	5008081xxx	20mm Cable Tape Ladder – Colors
	5008082xxx	20mm Cable Tape Ladder – Duotones
	5008080530	20mm Cable Tape Ladder – Natural
11b.	5007308000	Cable Tape Grommet
12a.	5009075xxx	Lift Cord – 1.4mm
12b.	5008083000	Lift Cord Grommet
13a.	5903093000	Break-Thru® Safety Tassel – Clear
	5903093xxx	Break-Thru Safety Tassel – 100 pack
	5903083xxx	Break-Thru Safety Tassel – 500 pack
13b.	5907308000	Break-Thru Safety Tassel Grommet
13c.	5008064000	Safety Cord Stop

xxx = 3-digit color code

No.	PCN	Description
14.	N/A	Bottom Rail (nested with headrail)
15.	5009033xxx	¾" Bottom Rail End Cap
16.	5009034xxx	¾" Tape Button
17.	5008036000	Clear Plastic Tape Spacer
18.	5907202000	Plastic Tilter Lock

Optional Parts:

19a.	5908070000	Extension Bracket
19b.	5908073000	End Mount Bracket
19c.	5908237000	Bracket Shim
20a.	5007309000	Metal Hold-Down Bracket (Jamb)
20b.	5007310000	Metal Hold-Down Bracket (Sill)
20c.	5007307000	Hold-Down Pin
21.	5909561000	Cord Bridge

©2004 Hunter Douglas Inc. ®Registered trademark of Hunter Douglas Inc. ™ Trademark of Hunter Douglas Inc. Last Revision 3/31/04

1" Decor® with LiteRise®

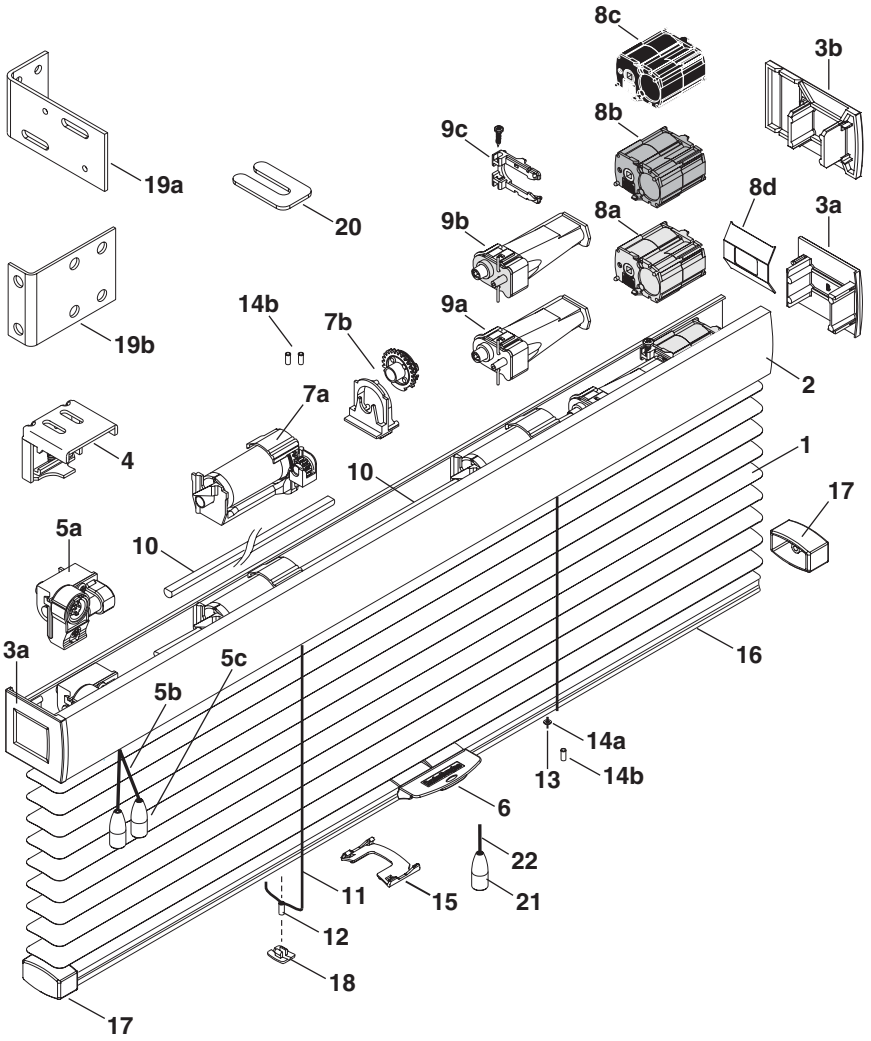

Standard Parts

1. Slat
2. Headrail
3a. Headrail End Cap
3b. Extended Headrail End Cap
4. Universal Gripper Bracket
5a. Cord Tilter
5b. Tilter Cord
5c. Tilter Tassels
6. LiteRise® Handle
7a. Lift & Tilt Roll Assembly
7b. Tilt Roll Assembly
8a. Motor (Beige)
8b. Motor (Gray)
8c. Motor (Black)
8d. 1" Motor Clamp
9a. Transmission (Natural)
9b. Transmission (Beige)
9c. Transmission Adaptor
10. Tiltrod
11. Cable Tape Ladder
12. Cable Tape Grommet
13. LiteRise Lift Cord
14a. Lift Cord Grommet
14b. X-Tape Locator – Grommet
15. Tape Spacer
16. Bottom Rail
17. Bottom Rail End Cap
18. Tape Button

©2004 Hunter Douglas Inc. ®Registered trademark of Hunter Douglas Inc. ™ Trademark of Hunter Douglas Inc. Last Revision 3/31/04

1" Celebrity®

No.	PCN	Description
1.	5001300xxxH	.006" x 25mm Slat
2.	5908018xxx	Beveled Headrail (with bottom rail nested) – 96 ft.
	5908019xxx	Beveled Headrail (with bottom rail nested) – 192 ft.
3a.	5908133xxx	Beveled Headrail End Cap
3b.	5008542000	Headrail End Lock
4a.	5908237xxx	Beveled Box Bracket
4b.	5908136000	Universal Gripper Bracket
4c.	5008556000	Beveled Intermediate Support Bracket
5.	5908566000	Wand Tilter Assembly
6.	5009508000	12" Micro Wand Assembly
	5009502000	20" Micro Wand Assembly
	5009551000	25" Micro Wand Assembly
	5009503000	30" Micro Wand Assembly
	5009552000	35" Micro Wand Assembly
	5009504000	40" Micro Wand Assembly
	5009505000	50" Micro Wand Assembly
	5009506000	60" Micro Wand Assembly
7a.	5908570000	Tape Roll/Slot Type
7b.	5908569000	Tape Roll/Bead Type
7c.	5008047000	X-Tape Locator – Grommet
8.	5908573000	Tape Roll Support
9a.	5008564000	Cordlock
9b.	5908565000	Cordlock Adaptor
9c.	5008065000	Lift Cord Separator
10.	5908027000	91-5 “D” Tiltrod – 16 ft.
11a.	5608081xxx	22mm Cable Tape Ladder
11b.	5007308000	Cable Tape Grommet
12a.	5009075xxx	Lift Cord – 1.4mm
12b.	5008083000	Lift Cord Grommet
12c.	5008064000	Safety Cord Stop
13a.	5903093000	Break-Thru® Safety Tassel – Clear
	5903093xxx	Break-Thru Safety Tassel – 100 pack
	5903083xxx	Break-Thru Safety Tassel – 500 pack
13b.	5907308000	Break-Thru Safety Tassel Grommet
14.	5008036000	Clear Plastic Tape Spacer
15.	N/A	Bottom Rail (nested with headrail)
16.	5009033xxx	¾" Bottom Rail End Cap
17.	5009034xxx	¾" Tape Button
18.	5907202000	Plastic Tilter Lock

No.	PCN	Description
Optional Parts:		
19a.	5908070000	Extension Bracket
19b.	5908073000	End Mount Bracket
19c.	5908237000	Bracket Shim
20a.	5007309000	Metal Hold-Down Bracket (Jamb)
20b.	5007310000	Metal Hold-Down Bracket (Sill)
20c.	5007307000	Hold-Down Pin

xxx = 3-digit color code

©2004 Hunter Douglas Inc. ®Registered trademark of Hunter Douglas Inc. ™ Trademark of Hunter Douglas Inc. Last Revision 3/31/04

2" Macro

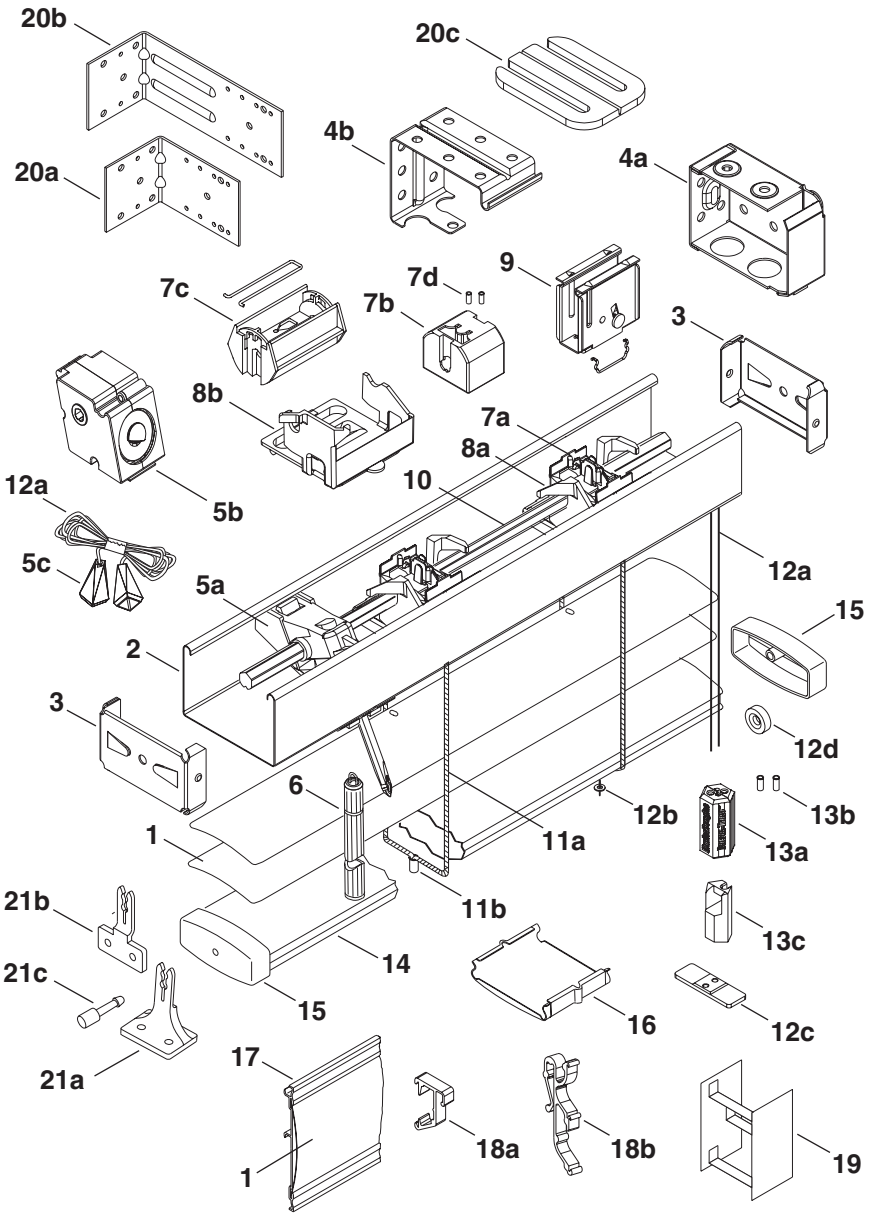

Standard Parts

1. Slat
2. Headrail
3. Headrail End Lock
4a. Installation Bracket
4b. Intermediate Support Bracket
5a. Wand Tilter
5b. Cord Tilter
5c. Tilter Tassels
6. Wand
7a. Tape Roll/Slot Type
7b. Tape Roll/Bead Type
7c. LP Cloth Tape Roll
7d. Cable Tape Grommet
8a. Cable Tape Roll Support
8b. Wide Tape Roll Support
9. Cordlock
10. Tiltrod
11a. Cable Tape Ladder
11b. Cable Tape Grommet
12a. Lift Cord
12b. Lift Cord Grommet
12c. Lift Cord Anchor
12d. Safety Cord Stop
13a. Break-Thru® Safety Tassel
13b. Break-Thru Safety Tassel Grommet
13c. Break-Thru Safety Tassel Weight
14. Bottom Rail
15. Bottom Rail End Cap
16. Tape Lock
17. Valance
18a. Quick Valance Clip
18b. Valance Clip
19. Cotton Tape Ladder

Optional Parts

20a. Short Extension Bracket
20b. Long Extension Bracket
20c. Bracket Spacer
21a. Hold-Down Bracket (Sill)
21b. Hold-Down Bracket (Jamb)
21c. Hold-Down Pin

©2004 Hunter Douglas Inc. ®Registered trademark of Hunter Douglas Inc. ™ Trademark of Hunter Douglas Inc. Last Revision 3/31/04

2" Macro

No.	*PCN*	*Description*
1.	5001200xxxH	2" Slat Coil Stock
2.	5003004xxx	2" Low Profile Headrail
3.	5003655000	2" Low Profile End Lock
4a.	5003047xxx	2" Low Profile Installation Bracket
4b.	5003158000	2" Low Profile Intermediate Support Bracket
5a.	5003867000	2" Low Profile Wand Tilter
5b.	5003871000	2" Low Profile Cord Tilter
5c.	5003092xxx	2" Low Profile Cord Tilter Tassels
6.	5008508000	12" Wand Assembly
	5008501000	20" Wand Assembly
	5008502000	30" Wand Assembly
	5008503000	40" Wand Assembly
	5008504000	50" Wand Assembly
	5008505000	60" Wand Assembly
	5008570000	70" Wand Assembly
	5008578000	78" Wand Assembly
	5008506000	90" Wand Assembly
	5008507000	120" Wand Assembly
7a.	5003665000	2" Low Profile Tape Roll/Slot Type
7b.	5003660000	2" Low Profile Tape Roll/Bead Type
7c.	5003676000	2" Low Profile Cloth Tape Roll
7d.	5007308000	Cable Tape Grommet
8a.	5003579000	2" Low Profile Cable Tape Roll Support
8b.	5003580000	2" Low Profile Wide Tape Roll Support
9.	5003364000	2" Low Profile Cordlock Assembly
10.	5003033000	2" Low Profile Tiltrod (Asymmetrical Hex)
11a.	5003076xxx	2" 42mm Cable Tape Ladder
11b.	5003308000	2" Cable Tape Grommet
12a.	5009075xxx	1.4mm Lift Cord
12b.	5008083000	Lift Cord Grommet
12c.	5003196000	2" Low Profile de·Light™ Lift Cord Anchor
12d.	5008064000	Safety Cord Stop
13a.	5903093000	Break·Thru® Safety Tassel – Clear
	5903093xxx	Break·Thru Safety Tassel – 100 pack
	5903083xxx	Break·Thru Safety Tassel – 500 pack
13b.	5907308000	Break·Thru Safety Tassel Grommet
13c.	5903094000	Break·Thru Safety Tassel Weight
14.	5003023xxx	2" Bottom Rail
15.	5003093xxx	2" Bottom Rail End Cap
16.	5003041xxx	2" Tape Lock
17.	5003300xxx	2" PVC Colored Valance (400 ft.)
	5003310xxx	2" PVC Colored Valance (160 ft.)
18a.	5003241000	2" Quick Valance Clip
18b.	5008240000	Universal Blind Hairpin Valance Clip
19.	7002201xxx	2" Cotton Tape Ladder

Optional Parts:

20a.	5003167000	Low Profile Short Extension Bracket
20b.	5003168000	Low Profile Long Extension Bracket
20c.	7007069000	⅛" Bracket Spacer
21a.	7007075000	2" Hold·Down Bracket (Sill)
21b.	7007076000	2" Hold·Down Bracket (Jamb)
21c.	5007307000	Hold·Down Pin

xxx = 3·digit color code

©2004 Hunter Douglas Inc. ®Registered trademark of Hunter Douglas Inc. ™ Trademark of Hunter Douglas Inc. Last Revision 3/31/04

1/2" Lightlines®/Decor®

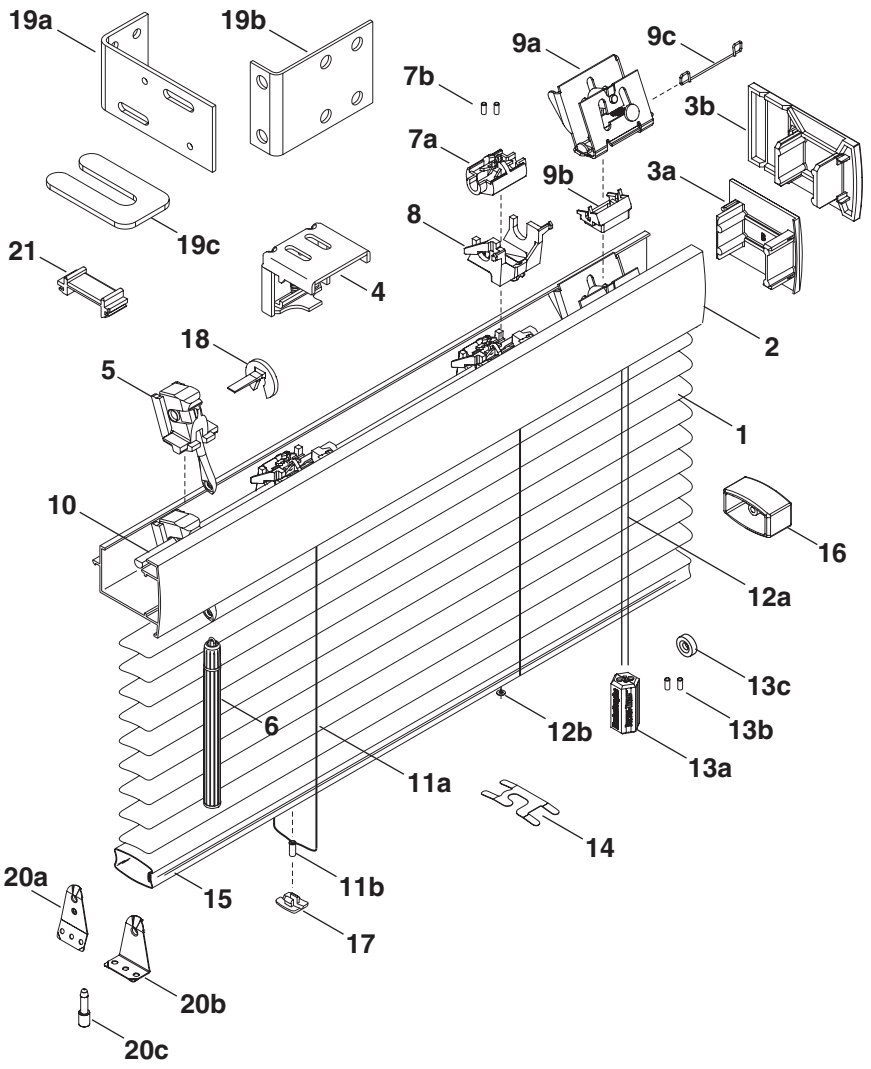

Standard Parts

1. Slat
2. Headrail
3a. Headrail End Cap
3b. Extended Headrail End Cap
4. Universal Gripper Bracket
5. Wand Tilter
6. Wand
7a. Tape Roll
7b. X-Tape Locator – Grommet
8. Tape Roll Support
9a. Cordlock
9b. Cordlock Adaptor
9c. Lift Cord Separator
10. Tiltrod
11a. Cable Tape Ladder
11b. Cable Tape Grommet
12a. Lift Cord
12b. Lift Cord Grommet
13a. Break-Thru® Safety Tassel
13b. Break-Thru Safety Tassel Grommet
13c. Safety Cord Stop
14. Tape Spacer
15. Bottom Rail
16. Bottom Rail End Cap
17. Tape Button
18. Tilter Lock

Optional Parts

19a. Extension Bracket
19b. End Mount Bracket
19c. Bracket Shim
20a. Hold-Down Bracket (Jamb)
20b. Hold-Down Bracket (Sill)
20c. Hold-Down Pin
21. Cord Bridge

©2004 Hunter Douglas Inc. ®Registered trademark of Hunter Douglas Inc. ™ Trademark of Hunter Douglas Inc. Last Revision 3/31/04

1/2" Lightlines®/Decor®

No.	PCN	Description
1.	5001600xxxH	.008" x 16mm Slat
2.	5908099xxx	Convex Headrail (with bottom rail nested) – 96 ft.
	5908009xxx	Convex Headrail (with bottom rail nested) – 192 ft.
3a.	5908034xxx	Convex Headrail End Cap
3b.	5907033xxx	Extended Convex Headrail End Cap
4.	5908136000	Universal Gripper Bracket
5.	5908566000	Wand Tilter Assembly
6.	5008508000	12" Wand Assembly
	5008501000	20" Wand Assembly
	5008502000	30" Wand Assembly
	5008503000	40" Wand Assembly
	5008504000	50" Wand Assembly
	5008505000	60" Wand Assembly
	5008570000	70" Wand Assembly
	5008578000	78" Wand Assembly
	5008506000	90" Wand Assembly
	5008507000	120" Wand Assembly
7a.	5909568000	Micro Tape Roll
7b.	5008047000	X-Tape Locator – Grommet
8.	5907567000	Tape Roll Support
9a.	5009584000	Cordlock
9b.	5908565000	Cordlock Adaptor
9c.	5008065000	Lift Cord Separator
10.	5908027000	Tiltrod – 16 ft.
11a.	5009071xxx	Micro Cable Tape Ladder – 12mm
11b.	5007308000	Cable Tape Grommet
12a.	5009077xxx	Lift Cord – 0.9mm
	5009075xxx	Lift Cord – 1.4mm
12b.	5008083000	Lift Cord Grommet
13a.	5903093000	Break-Thru® Safety Tassel – Clear
	5903093xxx	Break-Thru Safety Tassel – 100 pack
	5903083xxx	Break-Thru Safety Tassel – 500 pack
13b.	5907308000	Break-Thru Safety Tassel Grommet
13c.	5008064000	Safety Cord Stop
14.	5009200xxx	Micro Tape Spacer
15.	N/A	Bottom Rail (nested with headrail)
16.	5009033xxx	¾" Bottom Rail End Cap
17.	5009034xxx	¾" Tape Button
18.	5907202000	Plastic Tilter Lock

Optional Parts:

No.	PCN	Description
19a.	5908070000	Extension Bracket
19b.	5908073000	End Mount Bracket
19c.	5908237000	Bracket Shim
20a.	5007309000	Metal Hold-Down Bracket (Jamb)
20b.	5007310000	Metal Hold-Down Bracket (Sill)
20c.	5007307000	Hold-Down Pin
21.	5909561000	Cord Bridge

xxx = 3-digit color code

©2004 Hunter Douglas Inc. ®Registered trademark of Hunter Douglas Inc. ™ Trademark of Hunter Douglas Inc. Last Revision 3/31/04

PowerTilt™ (1" Lightlines® Model*)

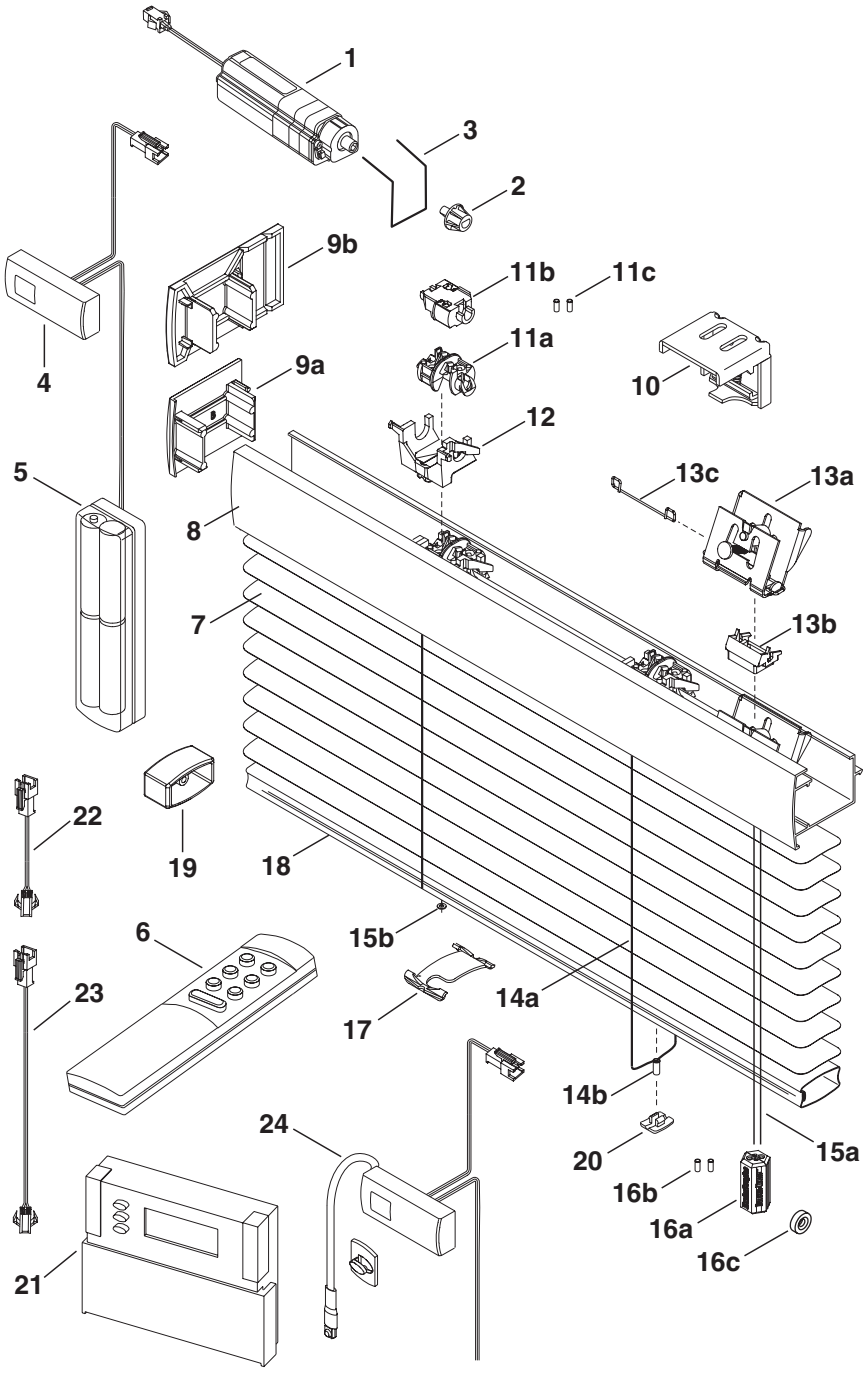

Standard Parts

1. 1" Tilt Motor
2. Shaft Adaptor
3. Rail Adaptor
4. Receiver Box
5. Battery Holder
6. Remote Control
7. Slat
8. Headrail

9a. Headrail End Cap
9b. Extended Headrail End Cap
10. Universal Gripper Bracket
11a. Tape Roll/Slot Type
11b. Tape Roll/Bead Type
11c. X-Tape Locator – Grommet
12. Tape Roll Support
13a. Cordlock
13b. Cordlock Adaptor
13c. Lift Cord Separator
14a. Cable Tape Ladder
14b. Cable Tape Grommet
15a. Lift Cord
15b. Lift Cord Grommet
16a. Break-Thru® Safety Tassel
16b. Break-Thru Safety Tassel Grommet
16c. Safety Cord Stop
17. Tape Spacer
18. Bottom Rail
19. Bottom Rail End Cap
20. Tape Button

Optional Parts

21. Chronolux Timer
22. Polarity Change Cable
23. Extension Cable (19" or 59")
24. Eagle Eye Receiver with Clip

Not Shown:
Extension Bracket
End Mount Bracket
Bracket Shim
Hold-Down Brackets

* This is a representative model of the PowerTilt system for the 1" convex headrail. System components can also be used on 1/2" Lightlines, 1/2" Decor® and 1" Decor. For 2" Macro system components, refer to the 2" PowerTilt system in the Alternative Wood Blinds and Shapes section.

©2004 Hunter Douglas Inc. ®Registered trademark of Hunter Douglas Inc. ™ Trademark of Hunter Douglas Inc. Last Revision 3/31/04