Duette® with EasyRise™ Standard

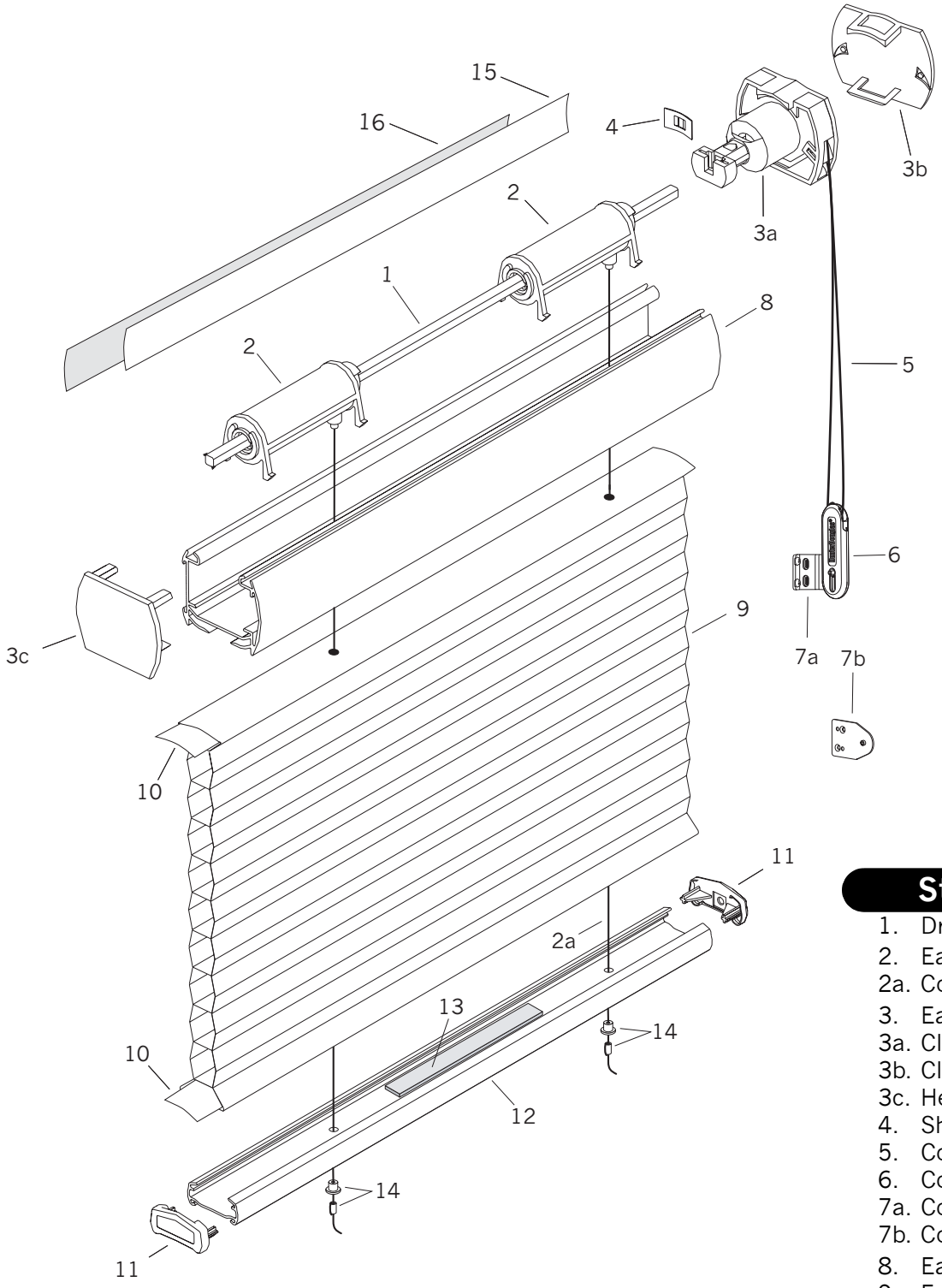

Standard Parts

1. Drive Shaft
2. EasyRise™ Lift Set/Spool Assembly

2a. Cord

3. EasyRise™ Clutch Set

3a. Clutch

3b. Clutch Cover

3c. Headrail End Cap

4. Shaft Retainer Clip
5. Cord Loop
6. Cord Tensioner

7a. Cord Tensioner Mounting Kit

7b. Cord Tensioner Mounting Kit - Flush

8. EasyRise™ Headrail
9. Fabric
10. Filler
11. Bottom Rail End Cap
12. Bottom Rail
13. Rail Weight*
14. Pocket & Ferrule

Optional Valance:

15. Filler Strip
16. Fabric Valance

© 2004 Hunter Douglas Inc. ® Registered trademark of Hunter Douglas Inc.

™ Trademark of Hunter Douglas Inc. Patented in the U.S. and foreign countries. U.S. and foreign patents pending.

Revision: 3/26/04

Duette® with EasyRise™ Standard

No.	*PCN*	*Description*
1.	2982013000	Drive shaft, steel (12' Length)
2.	2980028000	EasyRise™ Lift Set/Spool Assembly
2a.	2671000000	0.9 mm Cord
3.	2980027785	EasyRise™ Clutch Set
3a.	N/A	Clutch
3b.	N/A	Clutch Cover
3c.	N/A	Headrail End Cap
4.	2982020000	Shaft Retainer Clip
5.	4190020xxx	Cord Loop (2')
	4190030xxx	Cord Loop (3')
	4190040xxx	Cord Loop (4')
	4190050xxx	Cord Loop (5')
6.	4153028xxx	Cord Tensioner
7a.	4153052000	Cord Tensioner Mounting Kit
7b.	4154898000	Cord Tensioner Mounting Kit (Flush Mount)
8.	2981002785	EasyRise™ Headrail
9.	N/A	Fabric
10.	2954000000	Filler Strip
11.	2950020xxx	Bottom Rail End Cap
12.	2950010xxx	Bottom Rail
13.	2982028000	Rail Weight (*used only if needed)
14.	3200155xxx	Pocket & Ferrule
Optional Valance:		
15.	2954000000	Filler Strip
16.	2980141xxx	Fabric Valance (Semi-Opaque)
	2980147xxx	Fabric Valance (Opaque)

Additional Hardware:

(For pictures & specifics, see Duette® Easy-Lifting Systems Additional Hardware)

2980026000	Installation Bracket (⅜")
5007311000	Hold-Down Bracket (⅜" & ½")
2930230000	Spacer Block
2930340000	Extension Bracket

xxx = 3-digit color code

© 2004 Hunter Douglas Inc. ® Registered trademark of Hunter Douglas Inc.
™ Trademark of Hunter Douglas Inc. Patented in the U.S. and foreign countries. U.S. and foreign patents pending.

Duette® with EasyRise™ Standard

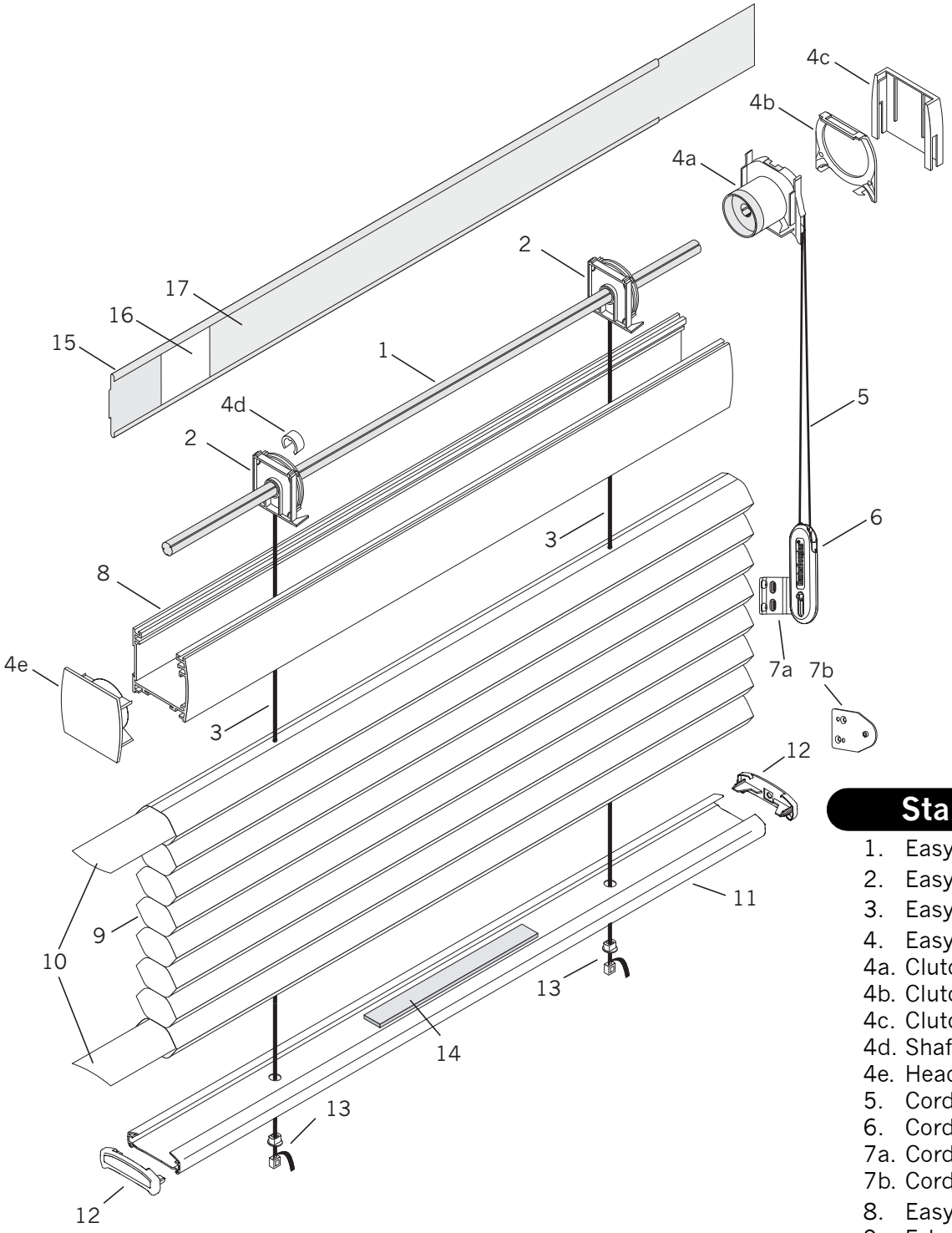

Standard Parts

1. EasyRise™ Shaft
2. EasyRise™ Lift Set
3. EasyRise™ Tape
4. EasyRise™ Clutch Set

4a. Clutch
4b. Clutch Cover
4c. Clutch End Cap
4d. Shaft Retainer
4e. Headrail End Cap

5. Cord Loop
6. Cord Tensioner

7a. Cord Tensioner Mounting Kit
7b. Cord Tensioner Mounting Kit - Flush

8. EasyRise™ Headrail
9. Fabric
10. Filler Strip
11. Bottom Rail
12. Bottom Rail End Cap
13. Pocket & Buckle
14. Rail Weight*

Optional Valance:

15. Valance Insert
16. Valance Retainer
17. Fabric Valance

© 2004 Hunter Douglas Inc. ® Registered trademark of Hunter Douglas Inc.
™ Trademark of Hunter Douglas Inc. Patented in the U.S. and foreign countries. U.S. and foreign patents pending.

Revision: 4/12/04

Duette® with EasyRise™ Standard

No.	*PCN*	*Description*
1.	2980060000	EasyRise™ Shaft
2.	2980025000	EasyRise™ Lift Set
3.	2980062000	EasyRise™ Tape
4.	2980022785	EasyRise™ Clutch Set
4a.	N/A	Clutch
4b.	N/A	Clutch Cover
4c.	N/A	Clutch End Cap
4d.	N/A	Shaft Retainer
4e.	N/A	Headrail End Cap
5.	4190020xxx	Cord Loop (2')
	4190030xxx	Cord Loop (3')
	4190040xxx	Cord Loop (4')
	4190050xxx	Cord Loop (5')
6.	4153028xxx	Cord Tensioner
7a.	4153052000	Cord Tensioner Mounting Kit
7b.	4154898000	Cord Tensioner Mounting Kit (Flush Mount)
8.	2981009785	EasyRise™ Headrail
9.	N/A	Fabric (¾", Double Honeycomb & Triple Honeycomb)
10.	2974000000	Filler Strip (¾", Double Honeycomb & Triple Honeycomb)
11.	2971640xxx	Bottom Rail (¾", Double Honeycomb & Triple Honeycomb)
12.	2982017xxx	Bottom Rail End Cap (¾", Double Honeycomb & Triple Honeycomb)
13.	2980078785	Pocket & Buckle
14.	2982028000	Rail Weight (*used only if needed)
Optional Valance:		
15.	2980077000	Valance Insert
16.	2980076000	Valance Retainer
17.	2980141xxx	Fabric Valance (Semi-Opaque)
	2980147xxx	Fabric Valance (Opaque)
	2980173xxx	Fabric Valance Semi-Sheer
	2980149xxx	Fabric Valance Silver Opalessence™
	2980152xxx	Fabric Valance Gold Opalessence™
	2980157xxx	Fabric Valance Copper Opalessence™

Additional Hardware:

(For pictures & specifics, see Duette® Easy-Lifting Systems Additional Hardware)

2980021000	Installation Bracket (¾")
5007312000	Hold-Down Bracket (¾")
2930230000	Spacer Block
2930340000	Extension Bracket

xxx = 3-digit color code

© 2004 Hunter Douglas Inc. ® Registered trademark of Hunter Douglas Inc.
™ Trademark of Hunter Douglas Inc. Patented in the U.S. and foreign countries. U.S. and foreign patents pending.

Duette® with EasyRise™ Standard

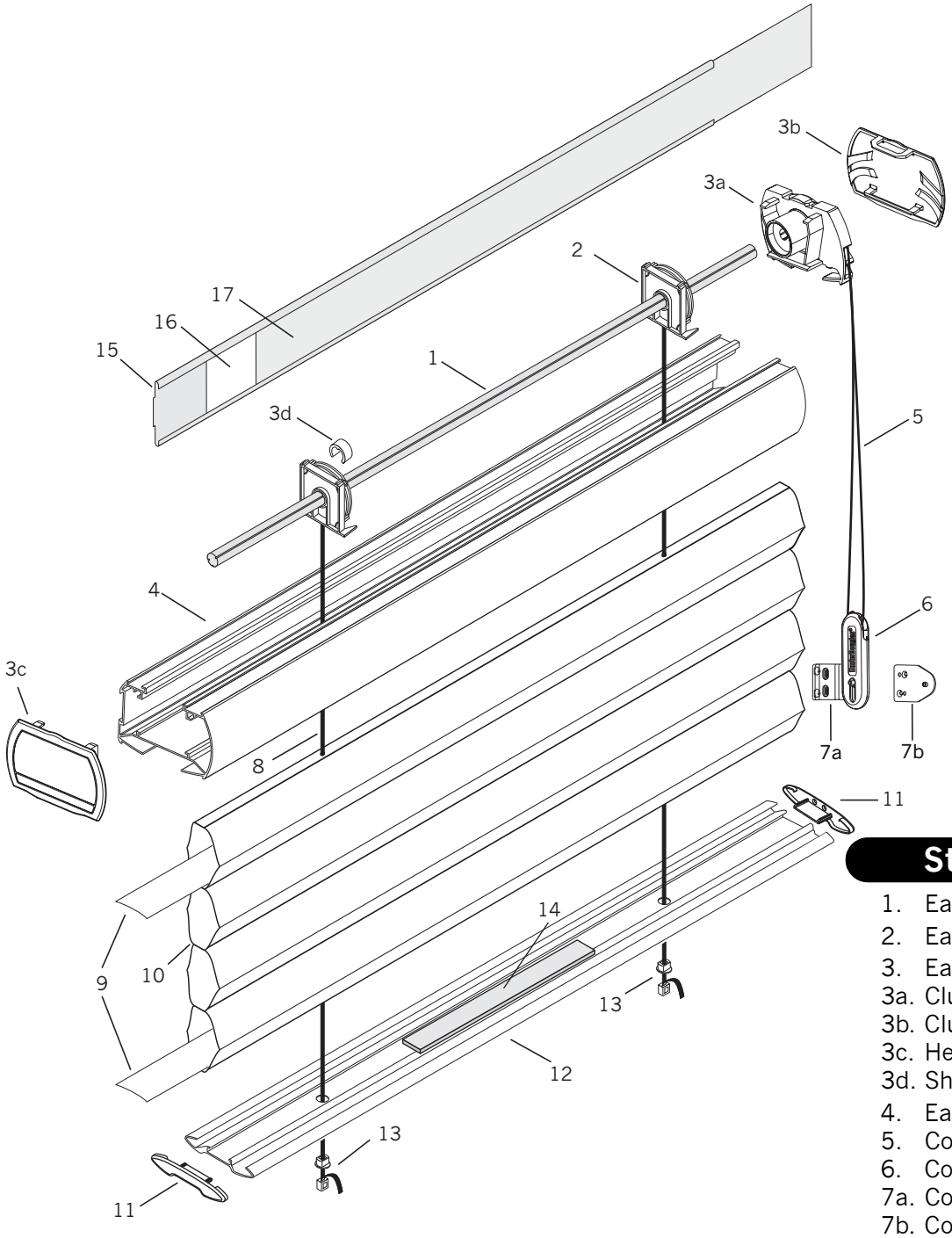

Standard Parts

1. EasyRise™ Shaft
2. EasyRise™ Lift Set
3. EasyRise™ Clutch Set

3a. Clutch
3b. Clutch End Cap
3c. Headrail End Cap
3d. Shaft Retainer Clip

4. EasyRise™ Headrail
5. Cord Loop
6. Cord Tensioner

7a. Cord Tensioner Mounting Kit
7b. Cord Tensioner Mounting Kit - Flush

8. EasyRise™ Tape
9. Filler Strip
10. Fabric
11. Bottom Rail End Cap
12. Bottom Rail
13. Pocket & Buckle
14. Rail Weight*

Optional Valance:

15. Valance Insert
16. Valance Retainer
17. Fabric Valance

© 2004 Hunter Douglas Inc. ® Registered trademark of Hunter Douglas Inc.
™ Trademark of Hunter Douglas Inc. Patented in the U.S. and foreign countries. U.S. and foreign patents pending.

Revision: 4/12/04

Duette® with EasyRise™ Standard

No.	*PCN*	*Description*
1.	2980060000	EasyRise™ Shaft
2.	2980025000	EasyRise™ Lift Set
3.	2980024785	EasyRise™ Clutch Set(1¼")
3a.	N/A	Clutch
3b.	N/A	Clutch End Cap
3c.	N/A	Headrail End Cap
3d.	N/A	Shaft Retainer Clip
4.	2980215785	EasyRise™ Headrail (1¼")
5.	4190020xxx	Cord Loop (2')
	4190030xxx	Cord Loop (3')
	4190040xxx	Cord Loop (4')
	4190050xxx	Cord Loop (5')
6.	4153028xxx	Cord Tensioner
7a.	4153052000	Cord Tensioner Mounting Kit
7b.	4154898000	Cord Tensioner Mounting Kit (Flush Mount)
8.	2980062000	EasyRise™ Tape
9.	2971311000	Filler Strip (1¼")
10.	D10174Axxx	Fabric (1¼" Semi-Opaque)
	D12174Axxx	Fabric (1¼" Opaque)
11.	2982343XXX	Bottom Rail End Cap (1¼")
12.	2971340XXX	Bottom Rail (1¼")
13.	2980078785	Pocket & Buckle
14.	2982028000	Rail Weight (*used only if needed)
Optional Valance:		
15.	2980077000	Valance Insert
16.	2980076000	Valance Retainer
17.	2980141xxx	Fabric Valance (Semi-Opaque)
	2980147xxx	Fabric Valance (Opaque)

Additional Hardware:

(For pictures & specifics, see Duette® Easy-Lifting Systems Additional Hardware)

2980026000	Installation Bracket
5007311000	Hold-Down Bracket
2930230000	Spacer Block
2930340000	Extension Bracket

xxx = 3-digit color code

© 2004 Hunter Douglas Inc. ® Registered trademark of Hunter Douglas Inc.
™ Trademark of Hunter Douglas Inc. Patented in the U.S. and foreign countries. U.S. and foreign patents pending.

Duette® with EasyRise™ Two-On-One Headrail

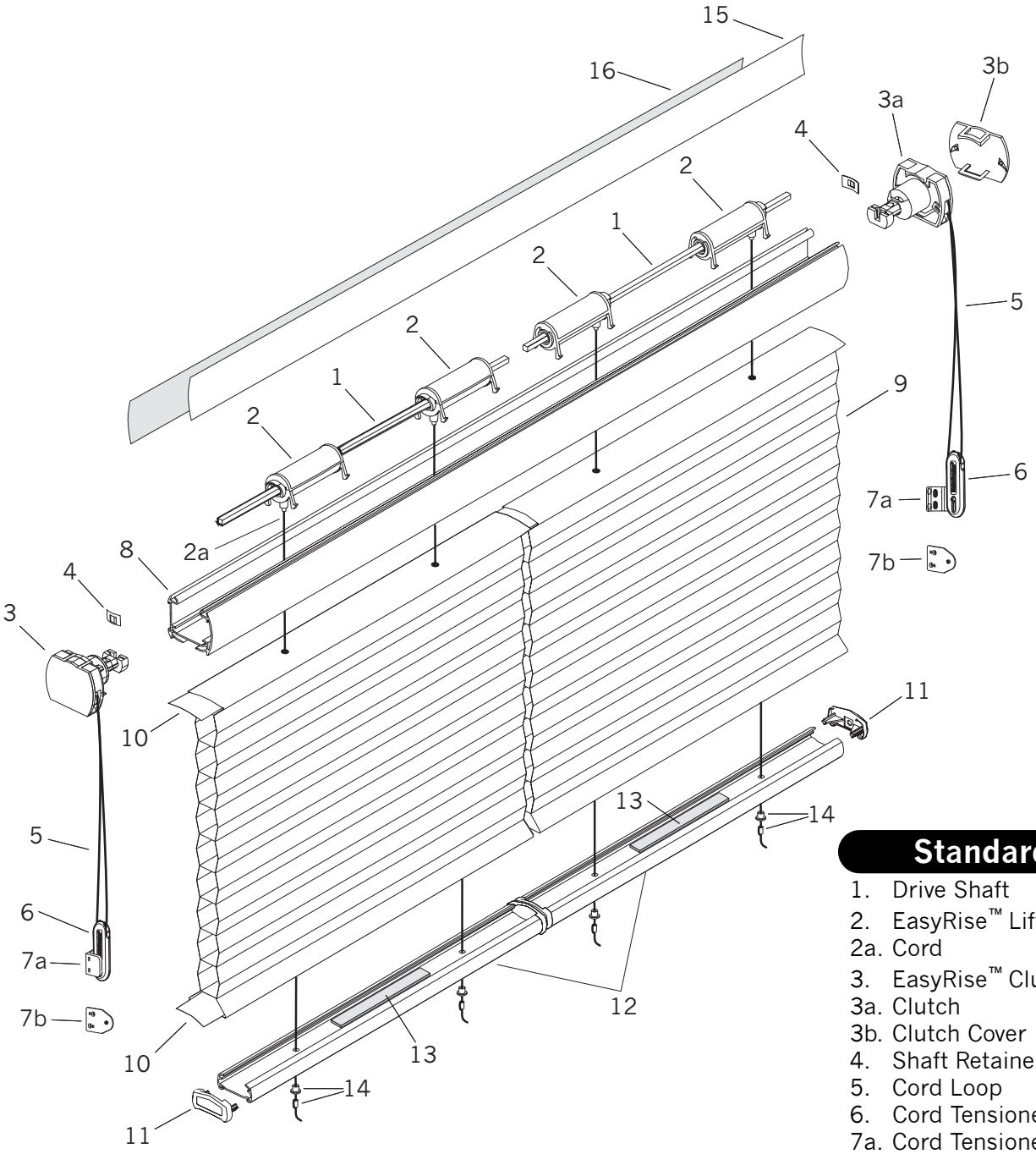

Standard Parts

1. Drive Shaft
2. EasyRise™ Lift Set/Spool Assembly
2a. Cord
3. EasyRise™ Clutch Set
3a. Clutch
3b. Clutch Cover
4. Shaft Retainer Clip
5. Cord Loop
6. Cord Tensioner
7a. Cord Tensioner Mounting Kit
7b. Cord Tensioner Mounting Kit - Flush
8. EasyRise™ Headrail
9. Fabric
10. Filler Strip
11. Bottom Rail End Cap
12. Bottom Rail
13. Rail Weight*
14. Pocket & Ferrule

Optional Valance:

15. Filler Strip
16. Fabric Valance

© 2004 Hunter Douglas Inc. ® Registered trademark of Hunter Douglas Inc.
™ Trademark of Hunter Douglas Inc. Patented in the U.S. and foreign countries. U.S. and foreign patents pending.

Revision: 3/26/04

Duette® with EasyRise™ Two-On-One Headrail

No.	*PCN*	*Description*
1.	2982013000	Drive shaft, steel (12' Length)
2.	2980028000	EasyRise™ Lift Set/Spool Assembly
2a.	2671000000	0.9 mm Cord
3.	2980027785	EasyRise™ Clutch Set
3a.	N/A	Clutch
3b.	N/A	Clutch Cover
4.	2982020000	Shaft Retainer Clip
5.	4190020xxx	Cord Loop (2')
	4190030xxx	Cord Loop (3')
	4190040xxx	Cord Loop (4')
	4190050xxx	Cord Loop (5')
6.	4153028xxx	Cord Tensioner
7a.	4153052000	Cord Tensioner Mounting Kit
7b.	4154898000	Cord Tensioner Mounting Kit (Flush Mount)
8.	2981002785	EasyRise™ Headrail (⅜" & ½")
9.	N/A	Fabric (⅜" & ½")
10.	2954000000	Filler Strip (⅜")
	3200090885	Filler Strip (½")
11.	2982015xxx	Bottom Rail End Cap (⅜")
	2982007xxx	Bottom Rail End Cap (½")
12.	2971632xxx	Bottom Rail (⅜")
	2971637xxx	Bottom Rail (½")
13.	2982028000	Rail Weight (*used only if needed)
14.	3200155xxx	Pocket & Ferrule
Optional Valance:		
15.	2954000000	Filler Strip (⅜")
16.	2980141xxx	Fabric Valance (Semi-Opaque)
	2980147xxx	Fabric Valance (Opaque)

Additional Hardware:

(For pictures & specifics, see Duette® Easy-Lifting Systems Additional Hardware)

2980026000	Installation Bracket (⅜")
5007311000	Hold-Down Bracket (⅜" & ½")
2930230000	Spacer Block
2930340000	Extension Bracket

xxx = 3-digit color code

© 2004 Hunter Douglas Inc. ® Registered trademark of Hunter Douglas Inc.
™ Trademark of Hunter Douglas Inc. Patented in the U.S. and foreign countries. U.S. and foreign patents pending.

Duette® with EasyRise™ Two-On-One Headrail

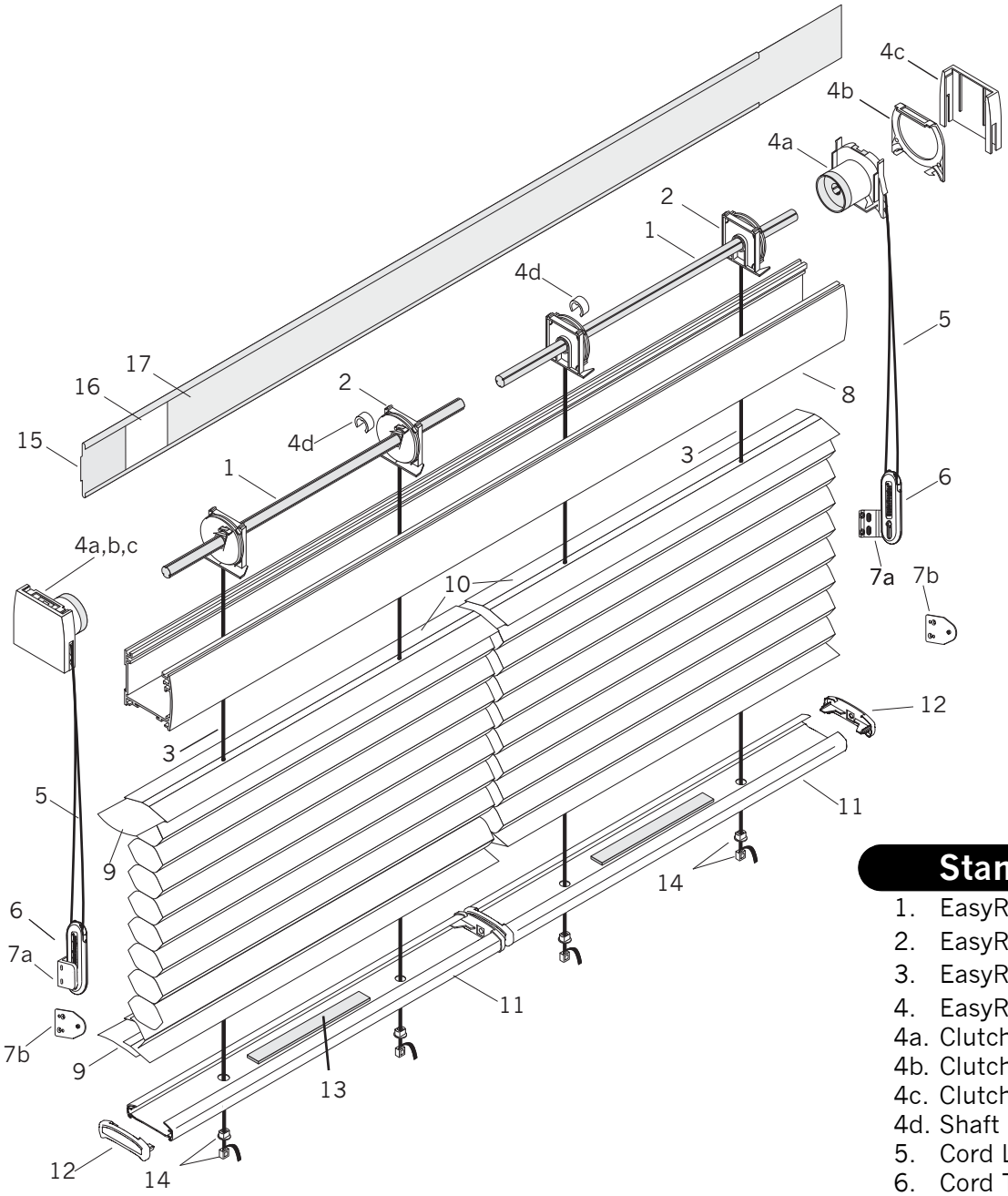

Standard Parts

1. EasyRise™ Shaft
2. EasyRise™ Lift Set
3. EasyRise™ Tape
4. EasyRise™ Clutch Set (Not Numbered)

4a. Clutch
4b. Clutch Cover
4c. Clutch End Cap
4d. Shaft Retainer

5. Cord Loop
6. Cord Tensioner

7a. Cord Tensioner Mounting Kit
7b. Cord Tensioner Mounting Kit - Flush

8. EasyRise™ Headrail
9. Filler Strip
10. Fabric
11. Bottom Rail
12. Bottom Rail End Cap
13. Rail Weight*
14. Pocket & Buckle

Optional Valance:

15. Valance Insert
16. Valance Retainer
17. Fabric Valance

© 2004 Hunter Douglas Inc. ® Registered trademark of Hunter Douglas Inc.
™ Trademark of Hunter Douglas Inc. Patented in the U.S. and foreign countries. U.S. and foreign patents pending.

Revision: 4/12/04

Duette® with EasyRise™ Two-On-One Headrail

No.	*PCN*	*Description*
1.	2980060000	EasyRise™ Shaft
2.	2980025000	EasyRise™ Lift Set
3.	2980062000	EasyRise™ Tape
4.	2980022785	EasyRise™ Clutch Set
4a.	N/A	Clutch
4b.	N/A	Clutch Cover
4c.	N/A	Clutch End Cap
4d.	N/A	Shaft Retainer
5.	4190020xxx	Cord Loop (2')
	4190030xxx	Cord Loop (3')
	4190040xxx	Cord Loop (4')
	4190050xxx	Cord Loop (5')
6.	2930516xxx	Cord Tensioner
7a.	4153052000	Cord Tensioner Mounting Kit
7b.	4154898000	Cord Tensioner Mounting Kit (Flush Mount)
8.	2981009785	EasyRise™ Headrail
9.	2974000000	Filler Strip (¾", Double & Triple Honeycomb)
10.	N/A	Fabric (¾", Double & Triple Honeycomb)
11.	2971640xxx	Bottom Rail (¾", Double & Triple Honeycomb)
12.	2982017xxx	Bottom Rail End Cap (¾", Double & Triple Honeycomb)
13.	2982028000	Rail Weight (*used only if needed)
14.	2980078785	Pocket & Buckle
Optional Valance:		
15.	2980077000	Valance Insert
16.	2980076000	Valance Retainer
17.	2980141xxx	Fabric Valance (Semi-Opaque)
	2980147xxx	Fabric Valance (Opaque)
	2980173xxx	Fabric Valance Semi-Sheer
	2980149xxx	Fabric Valance Silver Opalessence™
	2980152xxx	Fabric Valance Gold Opalessence™
	2980157xxx	Fabric Valance Copper Opalessence™

Additional Hardware:

(For pictures & specifics, see Duette® Easy-Lifting Systems Additional Hardware)

2980021000	Installation Bracket (¾")
5007312000	Hold-Down Bracket (¾")
2930230000	Spacer Block
2930340000	Extension Bracket

xxx = 3-digit color code

© 2004 Hunter Douglas Inc. ® Registered trademark of Hunter Douglas Inc.
™ Trademark of Hunter Douglas Inc. Patented in the U.S. and foreign countries. U.S. and foreign patents pending.

Duette® with EasyRise™ Two-On-One Headrail

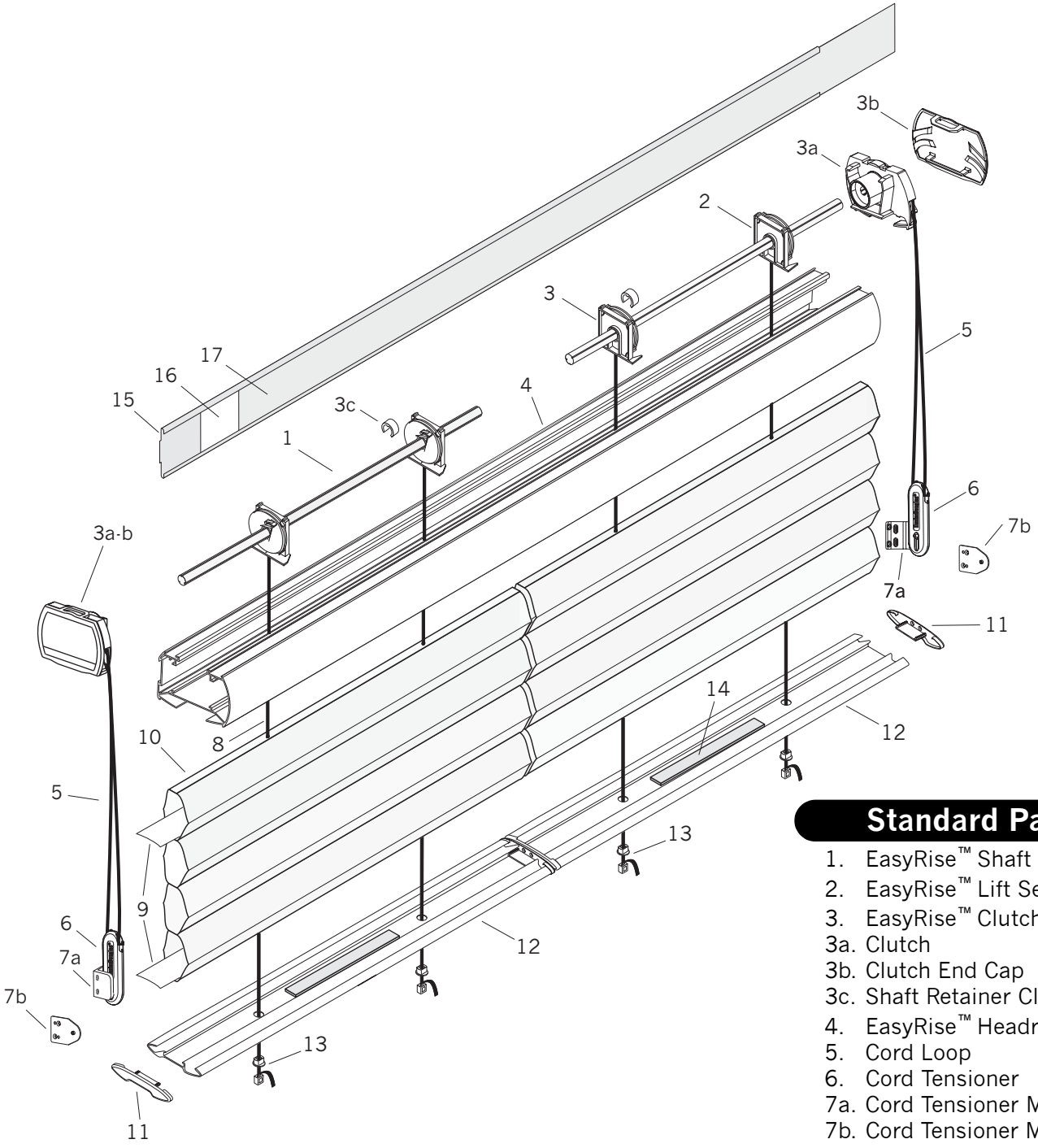

Standard Parts

1. EasyRise™ Shaft
2. EasyRise™ Lift Set
3. EasyRise™ Clutch Set

3a. Clutch
3b. Clutch End Cap
3c. Shaft Retainer Clip

4. EasyRise™ Headrail
5. Cord Loop
6. Cord Tensioner

7a. Cord Tensioner Mounting Kit
7b. Cord Tensioner Mounting Kit - Flush

8. EasyRise™ Tape
9. Filler Strip
10. Fabric
11. Bottom Rail End Cap
12. Bottom Rail
13. Pocket & Buckle
14. Rail Weight*

Optional Valance:

15. Valance Insert
16. Valance Retainer
17. Fabric Valance

© 2004 Hunter Douglas Inc. ® Registered trademark of Hunter Douglas Inc.
™ Trademark of Hunter Douglas Inc. Patented in the U.S. and foreign countries. U.S. and foreign patents pending.

Revision: 4/12/04

Duette® with EasyRise™ Two-On-One Headrail

No.	*PCN*	*Description*
1.	2980060000	EasyRise™ Shaft
2.	2980025000	EasyRise™ Lift Set
3.	2980024785	EasyRise™ Clutch Set(1¼")
3a.	N/A	Clutch
3b.	N/A	Clutch End Cap
3c.	N/A	Shaft Retainer Clip
4.	2980215785	EasyRise™ Headrail (1¼")
5.	4190020xxx	Cord Loop (2')
	4190030xxx	Cord Loop (3')
	4190040xxx	Cord Loop (4')
	4190050xxx	Cord Loop (5')
6.	4153028xxx	Cord Tensioner
7a.	4153052000	Cord Tensioner Mounting Ki
7b.	4154898000	Cord Tensioner Mounting Kit (Flush Mount)
8.	2980062000	EasyRise™ Tape
9.	2971311000	Filler Strip (1¼")
10.	D10174Axxx	Fabric (1¼" Semi-Opaque)
	D12174Axxx	Fabric (1¼" Opaque)
11.	2982343XXX	Bottom Rail End Cap (1¼")
12.	2971340XXX	Bottom Rail (1¼")
13.	2980078785	Pocket & Buckle
14.	2982028000	Rail Weight (*used only if needed)
Optional Valance:		
15.	2980077000	Valance Insert
16.	2980076000	Valance Retainer
17.	2980141xxx	Fabric Valance (Semi-Opaque)
	2980147xxx	Fabric Valance (Opaque)

Additional Hardware:

(For pictures & specifics, see Duette® Easy-Lifting Systems Additional Hardware)

2980026000	Installation Bracket (1¼")
5007311000	Hold-Down Bracket (1¼")
2930230000	Spacer Block
2930340000	Extension Bracket

xxx = 3-digit color code

© 2004 Hunter Douglas Inc. ® Registered trademark of Hunter Douglas Inc.
™ Trademark of Hunter Douglas Inc. Patented in the U.S. and foreign countries. U.S. and foreign patents pending.

Duette® with LiteRise®

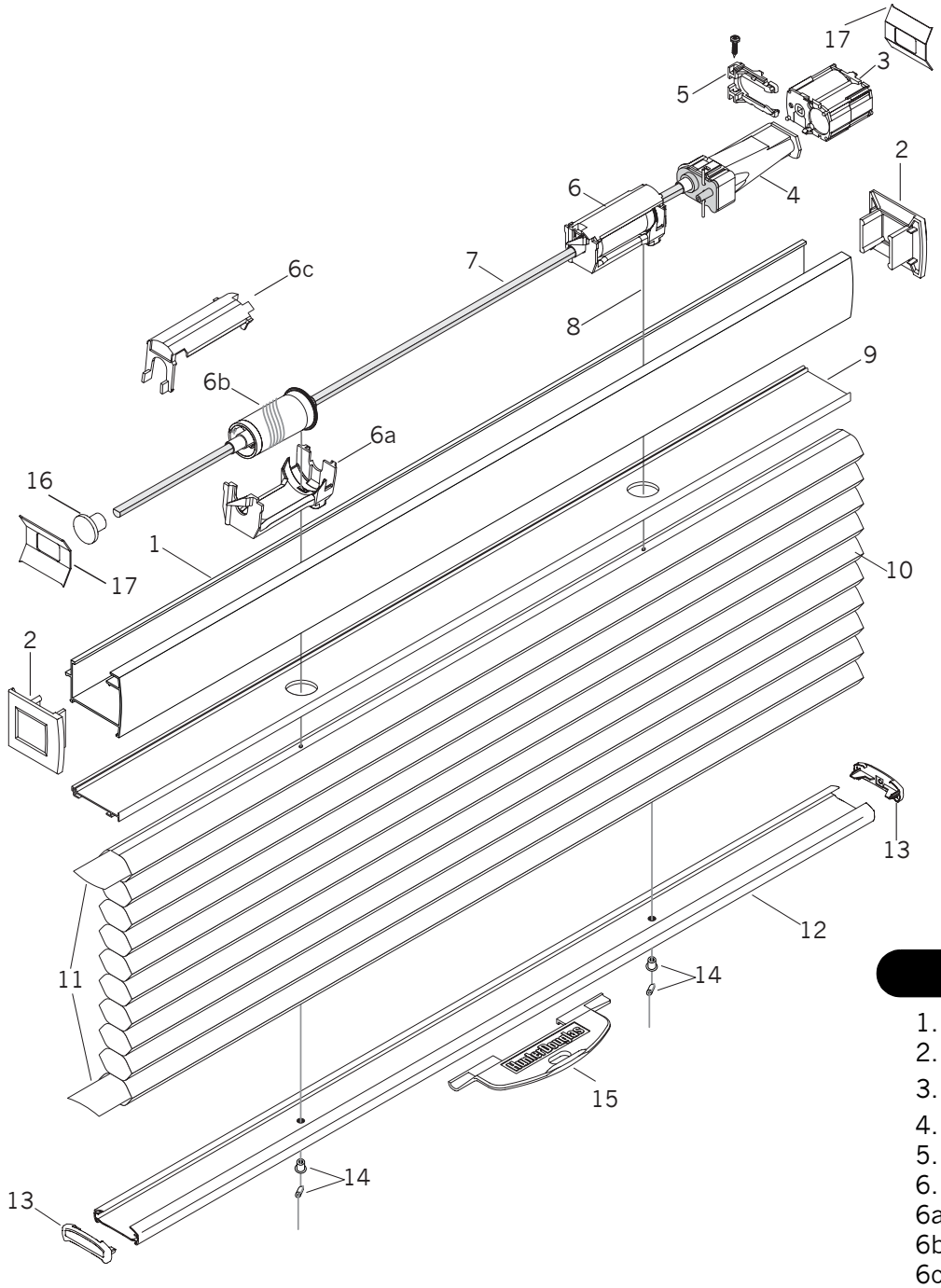

Standard Parts

1. Lightlines® Universal Headrail
2. Headrail End Cap
3. LiteRise® Motor
4. LiteRise® Transmission
5. Transmission Adaptor with Screw
6. Fabric Lift Roll Assembly

6a. Lift Rod Support
6b. Spool
6c. Spool Cover

7. Polymer Lift Rod
8. Cord
9. Fabric Channel
10. Fabric
11. Filler Strip
12. UltraGlide® Bottom Rail
13. UltraGlide® Bottom Rail End Cap
14. Pocket & Ferrule
15. Bottom Rail Handle
16. Stop Pad
17. Motor Stop

© 2004 Hunter Douglas Inc. ® Registered trademark of Hunter Douglas Inc.
™ Trademark of Hunter Douglas Inc. Patented in the U.S. and foreign countries. U.S. and foreign patents pending.

Duette® with LiteRise®

No.	*PCN*	*Description*
1.	5908008xxx	Lightlines® Universal Headrail
2.	5908034xxx	Headrail End Cap
3.	7300109000	LiteRise® Motor – Beige
	7300110000	LiteRise® Motor – Gray
	7300111000	LiteRise® Motor – Black
4.	7300105000	LiteRise® Transmission – Natural
	7300107000	LiteRise® Transmission – Beige
5.	7300133000	Transmission Adaptor with Screw
6.	7300301000	Fabric Lift Roll Assembly
	6a.	Lift Rod Support
	6b.	Spool
	6c.	Spool Cover
7.	5908029000	Polymer Lift Rod
8.	2671000000	0.9 mm Cord
9.	7300126000	⅜" Fabric Channel
	7300125000	½" Fabric Channel
10.	N/A	Fabric (⅜" and ½" Pleat Size)
11.	2954000000	⅜" Filler Strip
	3200090885	½" Filler Strip
12.	2971632xxx	⅜" UltraGlide® Bottom Rail
	2971637xxx	½" UltraGlide® Bottom Rail
13.	2982015xxx	⅜" UltraGlide® Bottom Rail End Cap
	2982007xxx	½" UltraGlide® Bottom Rail End Cap
14.	3200155xxx	Pocket & Ferrule
15.	7300113000	Bottom Rail Handle
16.	7300540000	Stop Pad
17.	7300143000	Motor Stop

Additional Hardware:

(For pictures & specifics, see Duette® Easy-Lifting Systems Additional Hardware)

5908037000	Installation Bracket
5907120000	Installation Bracket Assembly - ½"
5907780000	Installation Bracket Assembly - ⅜"
5908237000	Bracket Shim
5908070000	Extension Bracket
5908073000	End Mount Bracket
2982028000	Rail Weight
5007311000	Hold-Down Brackets ⅜" & ½"

xxx = 3-digit color code

© 2004 Hunter Douglas Inc. ® Registered trademark of Hunter Douglas Inc.
™ Trademark of Hunter Douglas Inc. Patented in the U.S. and foreign countries. U.S. and foreign patents pending.

Duette® with LiteRise®

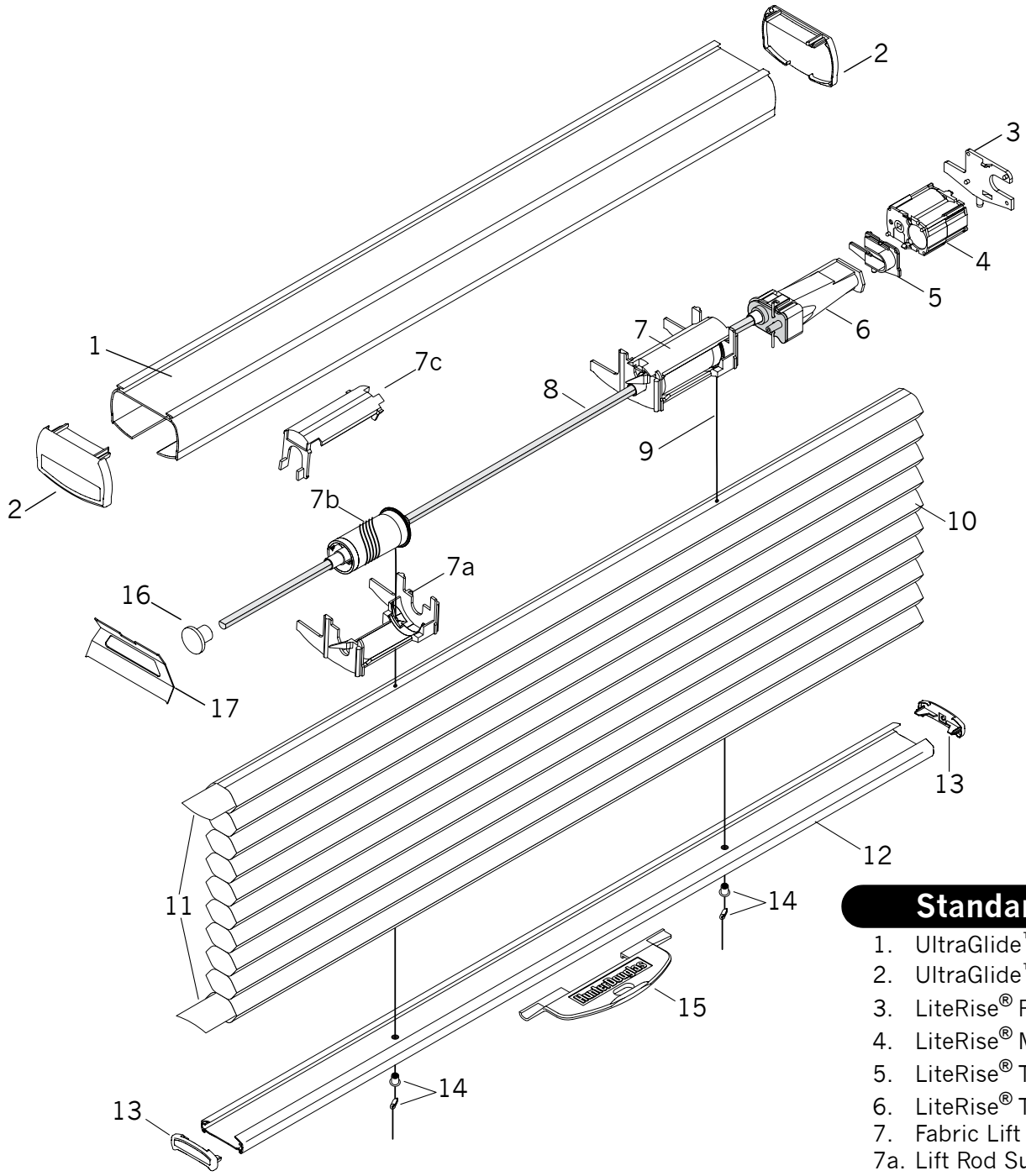

Standard Parts

1. UltraGlide™ Headrail
2. UltraGlide™ Headrail End Cap
3. LiteRise® Rear Motor Support
4. LiteRise® Motor
5. LiteRise® Transmission Adaptor
6. LiteRise® Transmission
7. Fabric Lift Roll Assembly

7a. Lift Rod Support
7b. Spool
7c. Spool Cover

8. Polymer Lift Rod
9. Cord
10. Fabric
11. Filler Strip
12. UltraGlide™ Bottom Rail
13. UltraGlide™ Bottom Rail End Cap
14. Pocket & Ferrule
15. Bottom Rail Handle
16. Stop Pad
17. Lift Rod Stop

© 2004 Hunter Douglas Inc. ® Registered trademark of Hunter Douglas Inc.

™ Trademark of Hunter Douglas Inc. Patented in the U.S. and foreign countries. U.S. and foreign patents pending.

Revision: 3/26/04

Duette® with LiteRise®

No.	*PCN*	*Description*
1.	2971639xxx	¾" UltraGlide™ Headrail
2.	2982008xxx	¾" UltraGlide™ Headrail End Cap
3.	7300144000	LiteRise® Rear Motor Support
4.	7300109000	LiteRise® Motor · Beige
	7300110000	LiteRise® Motor · Gray
	7300111000	LiteRise® Motor · Black
5.	7300182000	LiteRise® ¾" Transmission Adaptor
6.	7300105000	LiteRise® Transmission – Natural
	7300107000	LiteRise® Transmission – Beige
7.	7300302000	Fabric Lift Roll Assembly
	7a.	Lift Rod Support
	7b.	Spool
	7c.	Spool Cover
8.	5908029000	Polymer Lift Rod
9.	2671000000	0.9 mm Cord
10.	N/A	Fabric (¾" Pleat Size)
11.	2974000000	Filler Strip
12.	2971640xxx	¾" UltraGlide® Bottom Rail
13.	2982017xxx	¾" UltraGlide® Bottom Rail End Cap
14.	3200155xxx	Pocket & Ferrule
15.	7300181000	¾" Bottom Rail Handle
16.	7300540000	Stop Pad
17.	7300541000	Lift Rod Stop

Additional Hardware:

(For pictures & specifics, see Duette® Easy-Lifting Systems Additional Hardware)

2982001000	UltraGlide® Installation Bracket ¾"
2982027000	UltraGlide® Headrail End Mount Bracket ¾"
5007312000	Hold-Down Brackets ¾"
2930230000	UltraGlide® Spacer Block
2930340000	Extension Bracket
2982028000	Rail Weight

xxx = 3-digit color code

© 2004 Hunter Douglas Inc. ® Registered trademark of Hunter Douglas Inc.
™ Trademark of Hunter Douglas Inc. Patented in the U.S. and foreign countries. U.S. and foreign patents pending.

Duette® Easy-Lifting Systems Additional Hardware

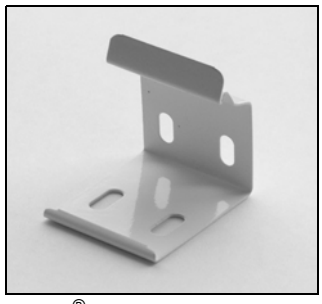

Duette® with EasyRise™ ⅜"
Installation Bracket
PCN 2980026000

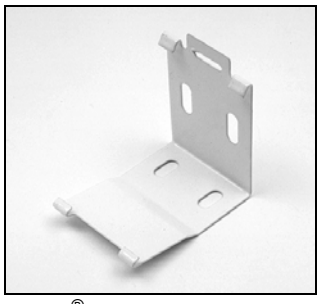

Duette® with EasyRise™ ¾"
Installation Bracket
PCN 2980021000

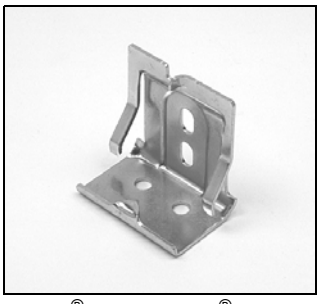

Duette® with LiteRise® ⅜", ½"
Installation Bracket
PCN 5908037000

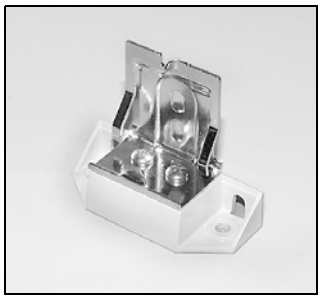

Duette® with LiteRise® ½"
Installation Bracket Assembly
PCN 5907120000

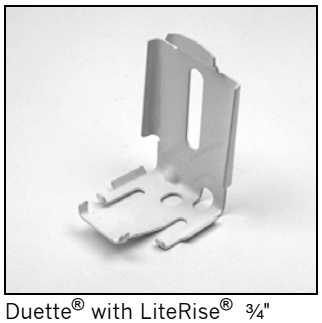

Duette® with LiteRise® ¾"
Installation Bracket
PCN 2982001000

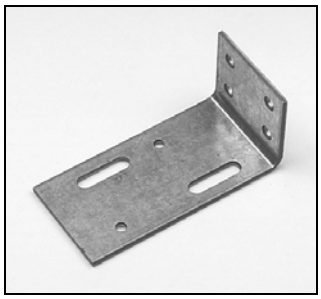

Duette® with LiteRise® ⅜", ½"
Extension Bracket
PCN 5908070000

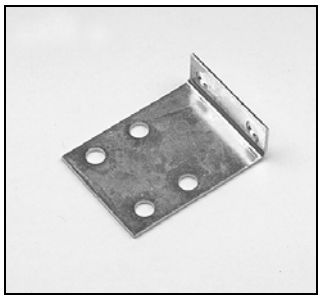

Duette® with LiteRise® ⅜", ½"
End Mount Bracket
PCN 5908073000

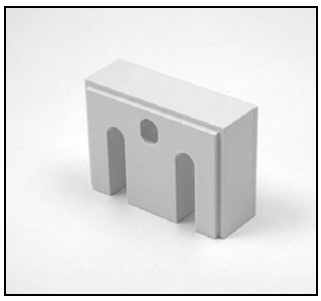

Spacer Block
PCN 2930230000

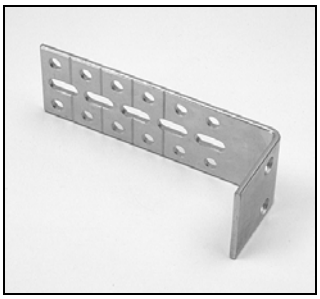

Extension Bracket
PCN 2930340000

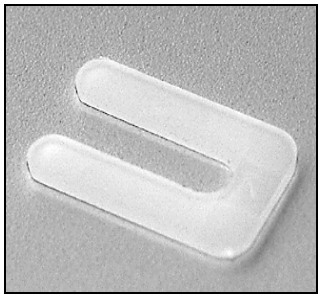

Duette® with LiteRise®
Bracket Shim
PCN 5908237000

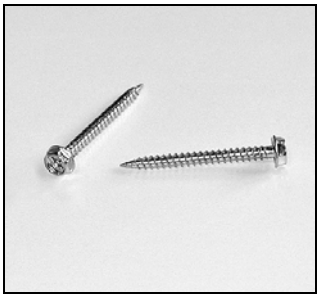

Mounting Screws 6X1.5
PCN 2980153000

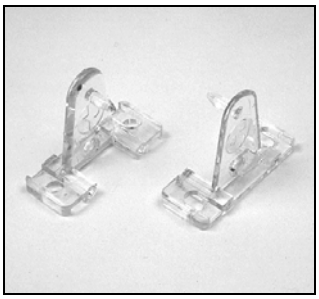

Hold-Down Brackets ⅜", ½"
PCN 5007311000

Hold-Down Brackets ¾"
PCN 5007312000

Cord Tensioner Kit
PCN 2930562000

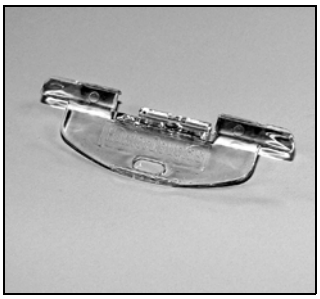

Duette® with LiteRise®
⅜", ½" Handle
PCN 7300113000

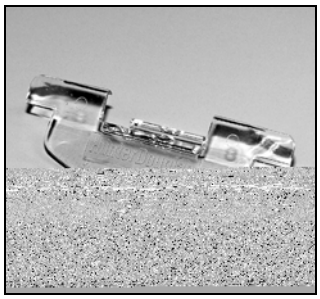

Duette® with LiteRise®
¾" Handle
PCN 7300181000

© 2004 Hunter Douglas Inc. ® Registered trademark of Hunter Douglas Inc.
™ Trademark of Hunter Douglas Inc. Patented in the U.S. and foreign countries. U.S. and foreign patents pending.